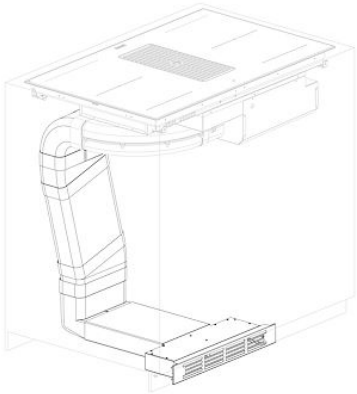

KIT FILTRE VENTO

Accessories e Complements

Code: A700 D77

DETAILS

Material	Stainless steel mask
Full description	plinth height 60/80 mm
Type of accessory	Hoods accessories